microSD™ Card Connectors

DM3 Series

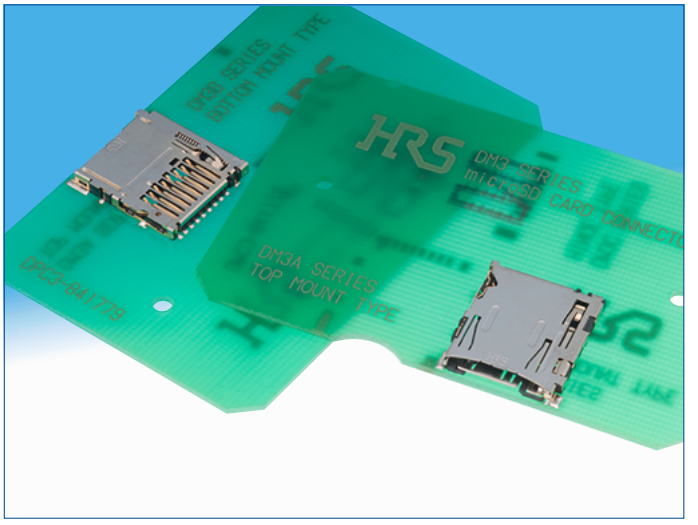

■Features

◆ Common to the entire Series

1. Extremely small in size

Small external dimensions and the above-the-board height make the connectors the smallest on the market.

2. Reverse card insertion protection

Unique card slot design (patented) protects the connector from damage when the card is attempted to be inserted in reverse, allowing it to re-inserted correctly.

3. Effective ground and shield configuration

4-connection points of the metal cover to the printed circuit board assures secure connection of the ground circuit and provides EMI protection.

4. Rigid and strong construction

Despite its small size, high-strengths materials used in the connectors produced a strong and rigid structure.

5. Card detection switch

The card detection switch is Normally Open

◆ DM3AT and DM3BT (Push - Push, with ejection mechanism)

- **Card fall-out prevention**
  Built-in card tray and the unique push insertion-push ejection mechanism (patented) prevent accidental card ejection or fall-out.
  Despite its small size the connectors will eject the card to a distance of 4.0mm, allowing easy hold and removal of the card.
- **Exposed termination leads**
  Easy inspection and rework of the solder termination joints.

◆ DM3CS (Hinge, Push-Pull, manual, without ejection mechanism)

- **Simple and reliable card insertion**
  Hinged metal cover provides location and guides the card during the insertion / removal. Closing of the cover confirms the electrical and mechanical connection with a tactile click sensation.
- **Reliable contact with the card contact pads**
  Unique contact design and card slide action will clean the contact areas of the card.
- **Accessible termination areas**
  Contact solder terminations may be inspected and reworked.

◆ DM3D (Push -Pull, manual, without ejection mechanism)

- **Partial card insertion hold**
  Card will not fall-out even when it is not fully inserted. Full insertion and electrical / mechanical connection is confirmed with a distinct tactile feel.
- **Accessible termination areas**
  An inner lead system that can be reworked is used in this design. Contact solder terminations may be inspected and reworked.

Card insertion-ejection	Series	Image	Page
Push-Push	DM3AT	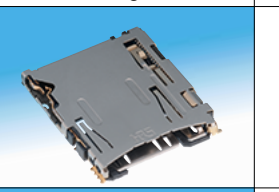	2~4
	DM3BT	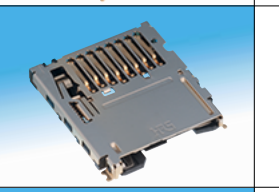	5~6
Hinge-manual insertion/ ejection	DM3CS	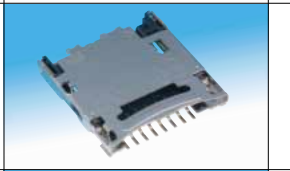	7~8
Push-Pull manual insertion/ ejection	DM3D	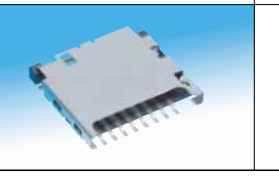	9~10

Jan.1.2026 Copyright 2026 HIROSE ELECTRIC CO., LTD. All Rights Reserved.

■Product Specifications (DM3 Series)

Ratings	Current rating : 0.5A Voltage rating : 125V AC	Operating temperature range : -25℃ to +85℃ (Note 1) Storage temperature range : -40℃ to +85℃ (Note 2)	Operating humidity range : RH 95% max. (No condensation)

Item	Specification	Conditions
1. Insulation resistance	1000MΩ min. (Initial value)	Measure at 500V DC
2. Withstanding voltage	No flashover or insulation breakdown	500 V AC / 1 minute
3. Contact resistance	100mΩ max. (Initial value)	1mA
4. Vibration	No electrical discontinuity of 100 ns or longer No damage, cracks or parts dislocation.	Frequency : 10 to 55Hz, single amplitude of 0.75mm, 3 directions for 2 hours
5. Humidity	Contact resistance : 40mΩ max. (change from initial value) Insulation resistance : 100MΩ min. No damage, cracks or parts dislocation.	96 hours at of 40 ± 2℃, and humidity of 90 to 95%
6. Temperature cycle	Contact resistance : 40mΩ max. (change from initial value) Insulation resistance : 100MΩ min. No damage, cracks or parts dislocation.	-55℃ → 5 to 35℃ →85℃ → 5 to 35℃ Times : 30 min. → 5 min. → 30 min. → 5 min. 5 cycles
7. Durability	Contact resistance : 40mΩ max. (change from initial value)	10,000 cycles, 400 to 600 cycles per hour (DM3AT, DM3B) 5,000 cycles, 400 to 600 cycles per hour (DM3C, DM3D)
8. Resistance to soldering heat	No deformation of components affecting performance.	Reflow : At the recommended temperature profile Manual soldering : 350℃ for 3 seconds

Note 1 : Includes temperature rise caused by current flow.
Note 2 : The term "storage" refers to products stored for long period prior to mounting and use.

■Materials / Finish

DM3AT, DM3BT

Part	Material	Finish	Remarks
Insulator	LCP	Color : Black	UL94V-0
Contacts	Copper alloy	Contact area : Gold plated Lead area : Gold plated	————
Guide cover	Stainless steel (DM3AT) Copper alloy (DM3BT)	Lead area : Gold plated	————
Other components	Stainless steel (DM3AT, DM3BT) Piano wire (DM3BT)	———— Nickel plated	————

DM3CS, DM3D

Part	Material	Finish	Remarks
Insulator	LCP	Color : Black	UL94V-0
Contacts	Copper alloy	Contact area : Gold plated Lead area : Gold plated	————
Guide cover	Stainless steel	———— (DM3CS) Tin plated (DM3D)	————

■Product Number Structure

Refer to the chart below when determining the product specifications from the product number.
Please select from the product numbers listed in this catalog when placing orders.

DM3 AT – SF – PEJM5
❶ ❷ ❸ ❹

❶ Series name : DM3	❸ Termination type : SF Right-angle SMT(Standard) DSF Right-angle SMT(Reverse)
❷ Connector type : AT Push-Push (ejection mechanism), Top board mounting (Standard) BT Push-Push (ejection mechanism), Bottom board mounting (Reverse) CS Hinge, Push-Pull (no ejection mechanism), Top board mounting (Standard) D Push-Pull (no ejection mechanism), Top board mounting (Standard) Number of contacts : 8	❹ Card ejection code : PEJM5, PEJS (Push insert/push eject) None : Manual card insertion/ejection

Jan.1.2026 Copyright 2026 HIROSE ELECTRIC CO., LTD. All Rights Reserved.

■DM3AT Push-Push (ejection mechanism), Top board mounting (Standard)

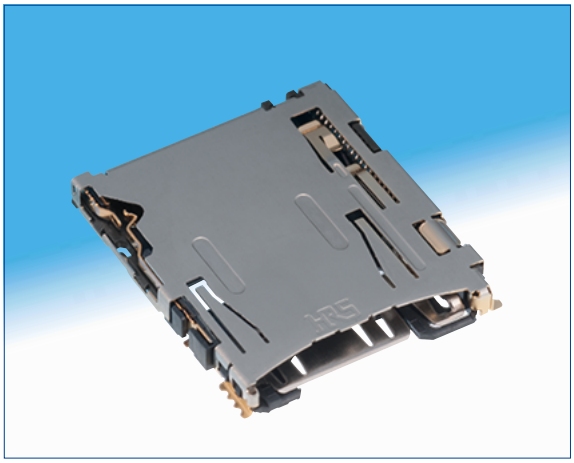

Part No.	HRS No.
DM3AT-SF-PEJM5	609-0031-0

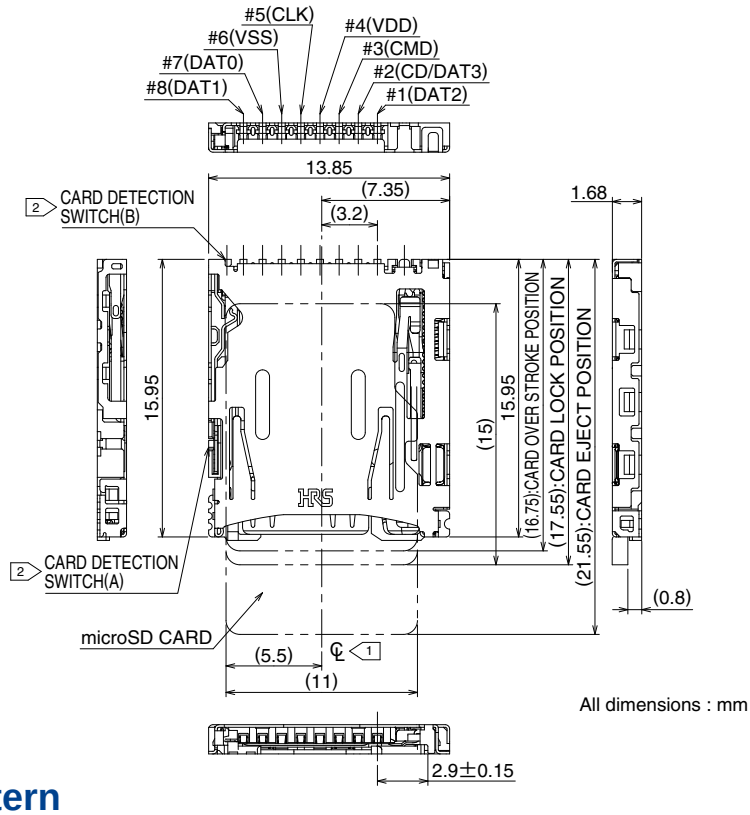

All dimensions : mm

■Recommended PCB mounting pattern

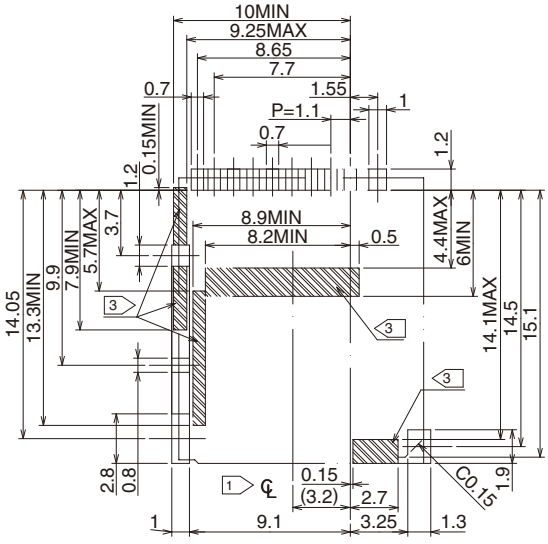

Note 1 ℄ indicates the center line of the microSD card slot.

2

Card detection switch	
Without the card	Card inserted
Open	Closed
(A) (B)	(A) (B)

3 No conductive traces.

All dimensions : mm

Jan.1.2026 Copyright 2026 HIROSE ELECTRIC CO., LTD. All Rights Reserved.

◆Packaging Specifications

● Embossed carrier tape dimensions (1,500 pcs/reel)

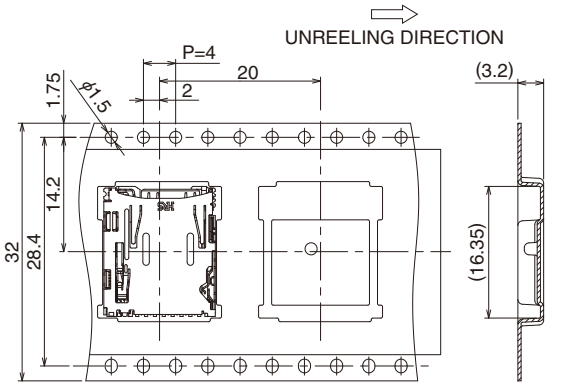

All dimensions : mm

● Reel Dimensions

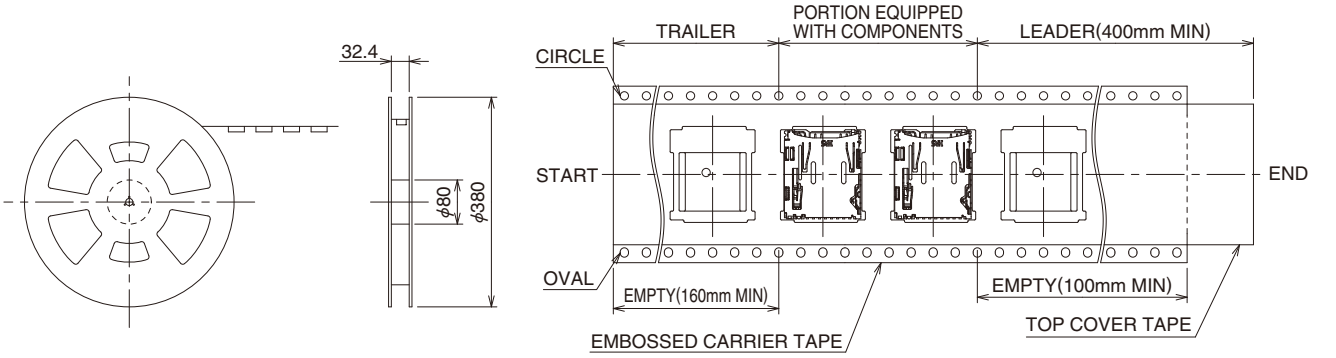

Jan.1.2026 Copyright 2026 HIROSE ELECTRIC CO., LTD. All Rights Reserved.

■DM3BT, Push-Push (ejection mechanism), Bottom board mounting (Reverse)

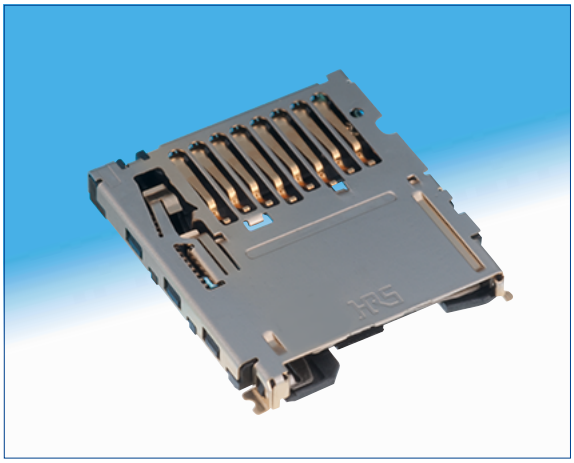

Part No.	HRS No.
DM3BT-DSF-PEJS	609-0029-9

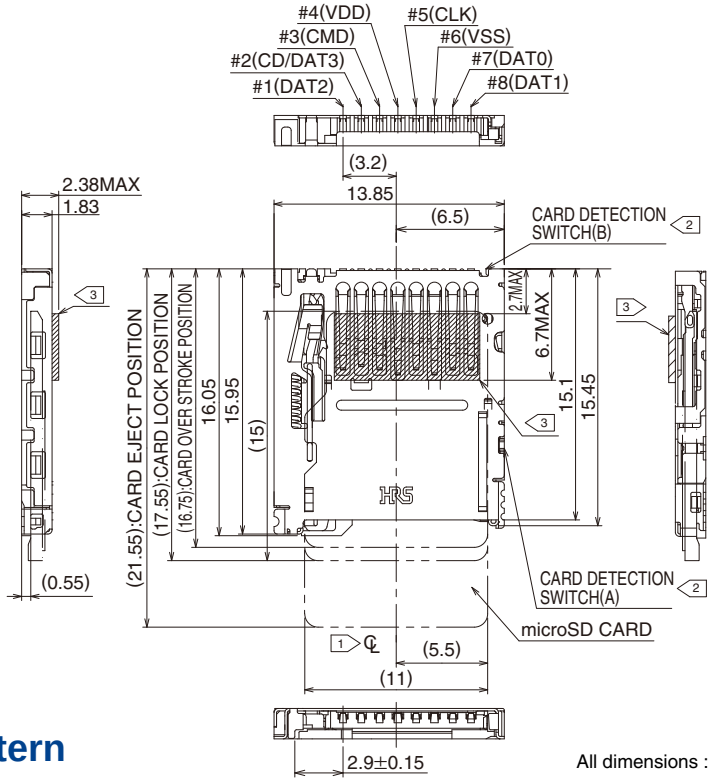

■Recommended PCB mounting pattern

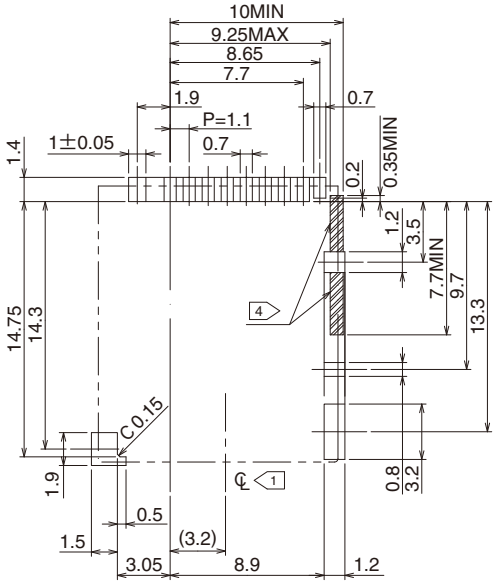

Note 1 ℄ indicates the center line of the microSD card slot.

2

Card detection switch	
Without the card	Card inserted
Open (A) (B)	Closed (A) (B)

3 Oblique-hatched area is projection of contact.

4 No conductive traces.

All dimensions : mm

Jan.1.2026 Copyright 2026 HIROSE ELECTRIC CO., LTD. All Rights Reserved.

◆Packaging Specifications

● Embossed carrier tape dimensions (1,200 pcs/reel)

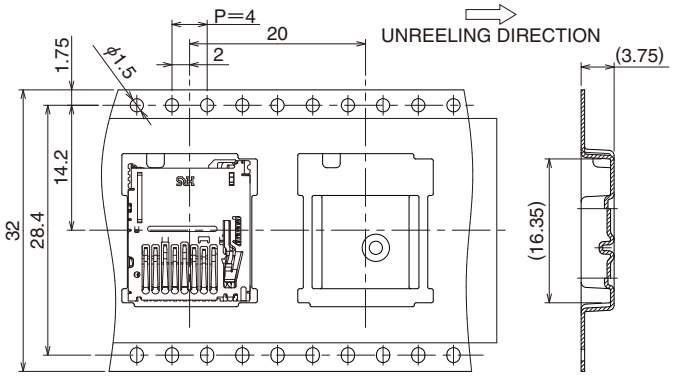

All dimensions : mm

● Reel Dimensions

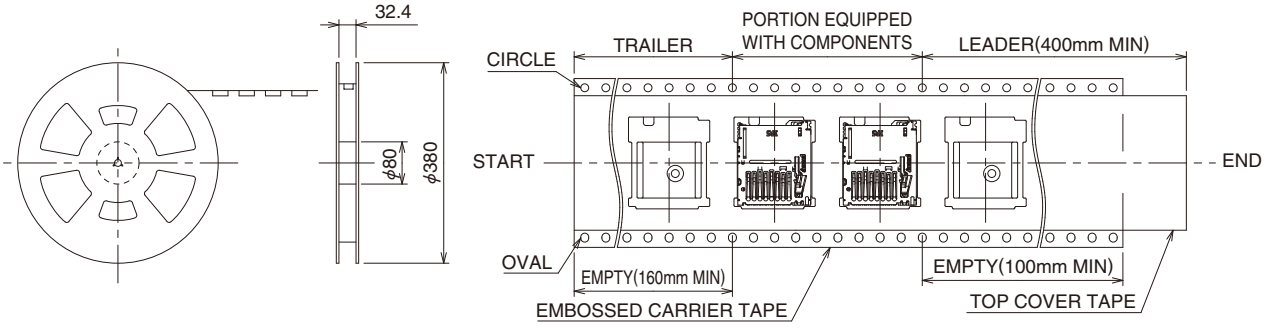

Jan.1.2026 Copyright 2026 HIROSE ELECTRIC CO., LTD. All Rights Reserved.

■DM3CS, Hinge, Push -Pull (no ejection mechanism), Top board mounting (Standard)

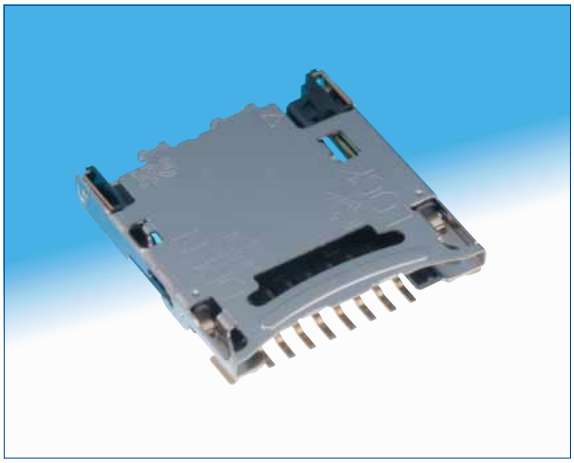

Part No.	HRS No.
DM3CS-SF	609-0032-3

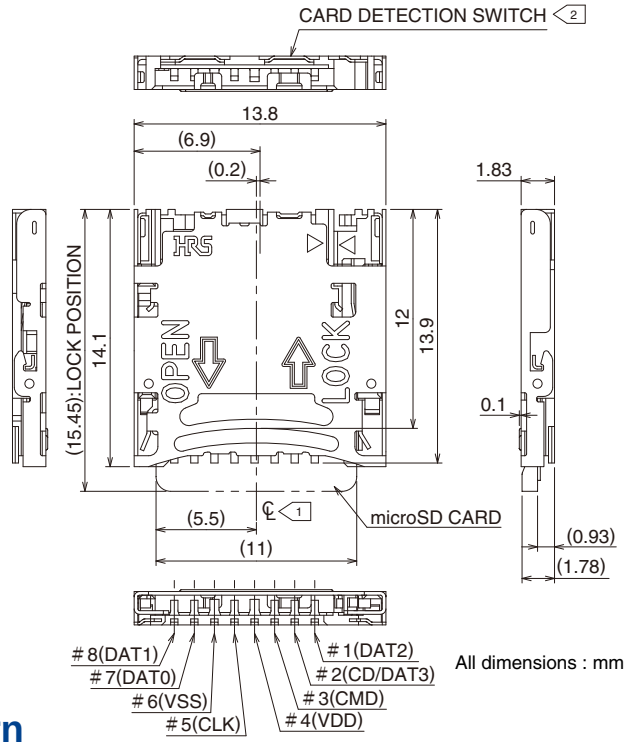

All dimensions : mm

■Recommended PCB mounting pattern

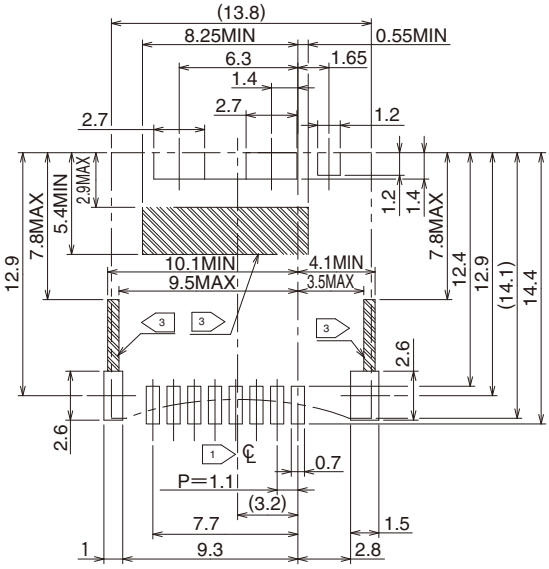

Note 1 ℄ indicates the center line of the microSD card slot.

2

Card detection switch	
Without the card	Card inserted
Open	Closed

3 No conductive traces.

All dimensions : mm

Jan.1.2026 Copyright 2026 HIROSE ELECTRIC CO., LTD. All Rights Reserved.

◆Packaging Specifications

● Embossed carrier tape dimensions (1,300 pcs/reel)

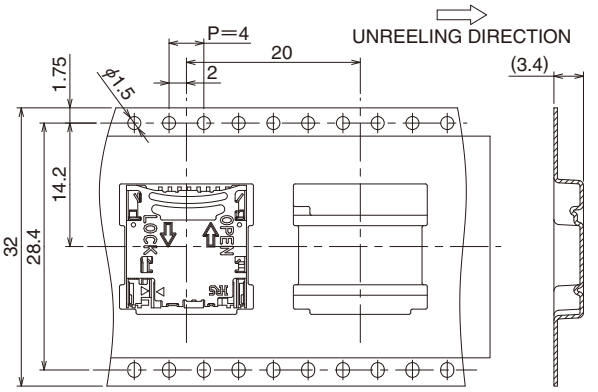

All dimensions : mm

● Reel Dimensions

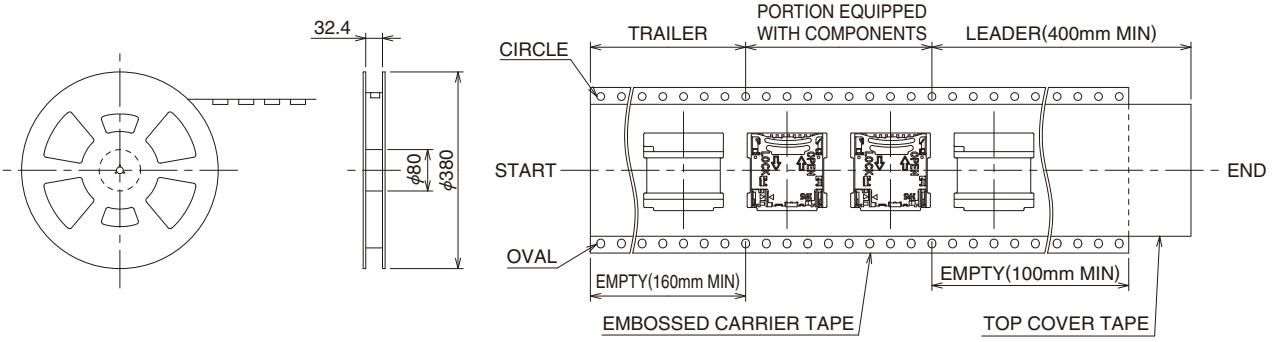

Jan.1.2026 Copyright 2026 HIROSE ELECTRIC CO., LTD. All Rights Reserved.

■DM3D, Push-Pull (no ejection mechanism), Top board mounting (Standard)

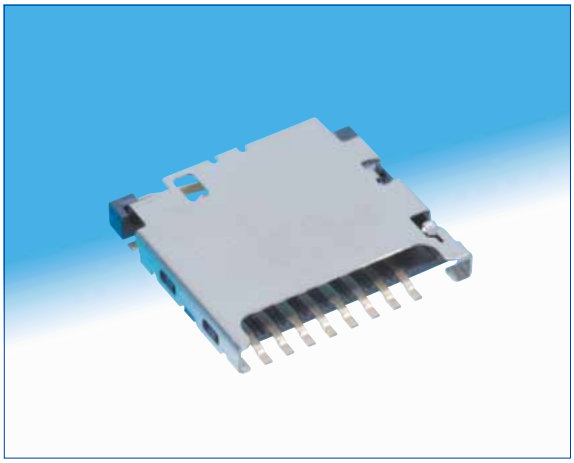

Part No.	HRS No.
DM3D-SF	609-0025-8

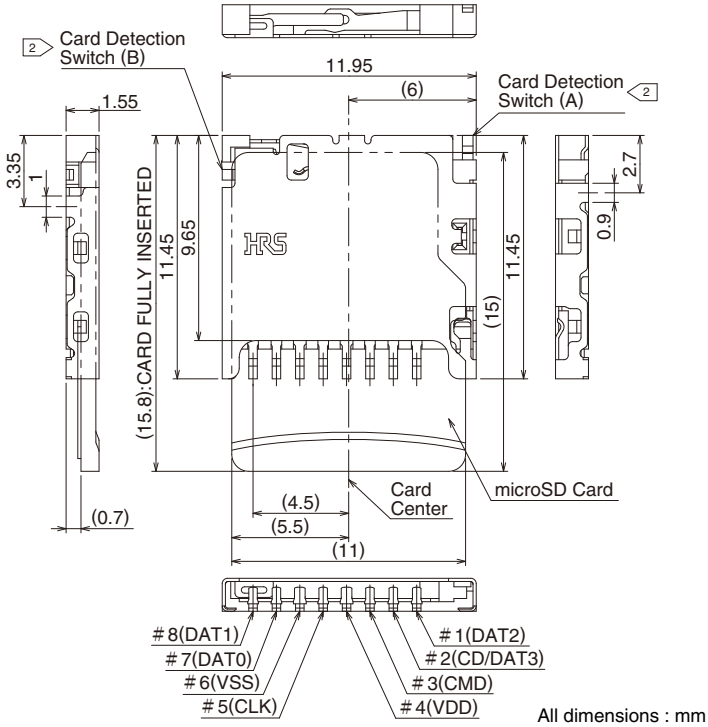

All dimensions : mm

■Recommended PCB mounting pattern

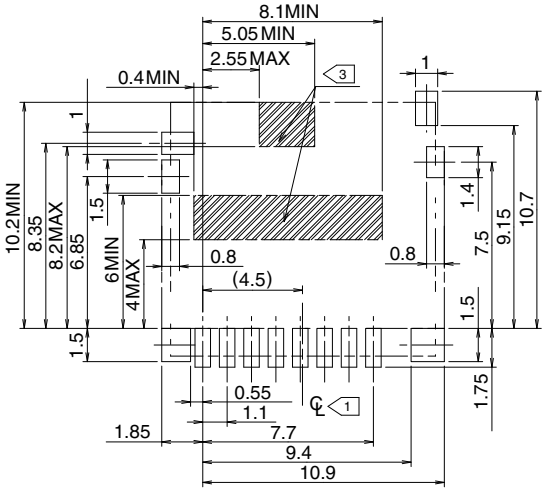

Note 1 ℄ indicates the center line of the microSD card slot.

2

Card detection switch	
Without the card	Card inserted
Open	Closed
(A) (B)	(A) (B)

3 No conductive traces.

All dimensions : mm

Jan.1.2026 Copyright 2026 HIROSE ELECTRIC CO., LTD. All Rights Reserved.

◆Packaging Specifications

● Embossed carrier tape dimensions (2,000 pcs/reel)

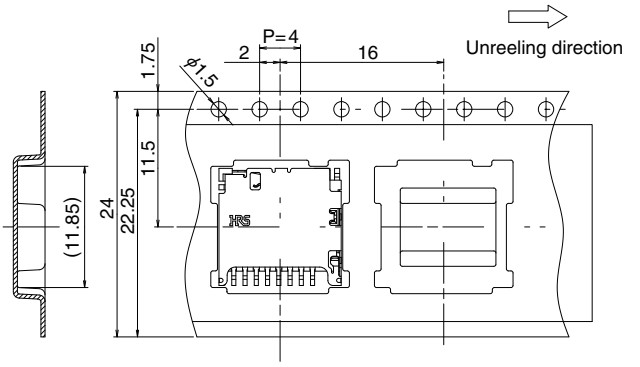

All dimensions : mm

● Reel Dimensions

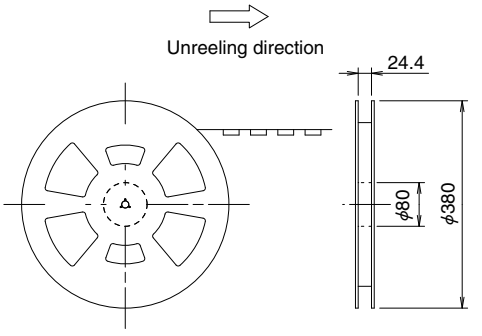

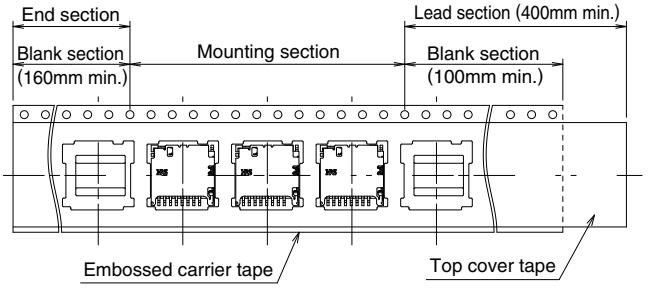

Jan.1.2026 Copyright 2026 HIROSE ELECTRIC CO., LTD. All Rights Reserved.

◆Recommended temperature profile

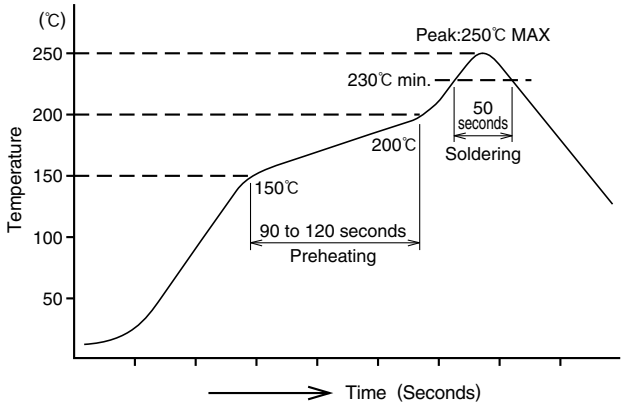

HRS test condition

Solder method	: Reflow, IR/hot air
Environment	: Room air
Solder composition	: Paste, 96.5%Sn/3.0%Ag/0.5%Cu (Senju Metal Industry, Co., Ltd.'s Part Number:M705-GRN360-K2-V)
Test board	: Glass epoxy 60mm×100mm×1.0mm thick
Metal mask	: 0.12mm thick
Number of reflow cycles	: 2cycles max.

The temperature profiles shown are based on the above conditions.
In individual applications the actual temperature may vary, depending on solder paste type, volume / thickness and board size / thickness. Consult your solder paste and equipment manufacturer for specific recommendations.

◆Precautions

1. Do not immerse or clean the entire connector with cleaning solutions as this may affect proper operation of the ejection mechanism and electrical performance of the connector

2. Do not apply excessive force to the connector when handling or after installation on the PC board.

3. The connectors will reliably connect and operate with the correctly inserted microSD™ cards.
   Follow the correct insertion / ejection procedure for the specific connector in use.
   Attempts of incorrect insertion of the card may cause damage to the connector or the card.

4. The connector must be correctly mounted on the PC board before the card can be inserted. Do not insert the card in the un-mounted connector.

5. Mounting on the Flexible Printed Circuit (FPC)
   To assure correct performance it is recommended that a flat reinforcement plate 0.3 mm min. thick be used under the FPC.

6. Small visible residual manufacturing fluids or tooling marks do not affect connector's performance.

7. Repeated insertions and removal of the cards may leave some marks on the card itself. This will have no affect on the connector performance.

● **Refer to applicable Operation Manual listed below for additional precautions.**

Series	Operation Manual Number
DM3AT Series	ETAD-F0345
DM3BT Series	ETAD-F0324
DM3CS Series	ETAD-F0335
DM3D Series	ETAD-F0353

Jan.1.2026 Copyright 2026 HIROSE ELECTRIC CO., LTD. All Rights Reserved.

USA:
HIROSE ELECTRIC (U.S.A.), INC. HEADQUARTERS CHICAGO OFFICE
2300 Warrenville Road, Suite 150,
Downers Grove, IL 60515
Phone : +1-630-282-6700
http://www.hirose.com/us/

USA:
HIROSE ELECTRIC (U.S.A.), INC. SAN JOSE OFFICE
2841 Junction Ave, Suite 200
San Jose, CA. 95134
Phone : +1-408-253-9640
Fax : +1-408-253-9641
http://www.hirose.com/us/

USA:
HIROSE ELECTRIC (U.S.A.), INC. DETROIT OFFICE (AUTOMOTIVE)
17197 N. Laurel Park Drive, Suite 253,
Livonia, MI 48152
Phone : +1-734-542-9963
Fax : +1-734-542-9964
http://www.hirose.com/us/

THE NETHERLANDS:
HIROSE ELECTRIC EUROPE B.V.
Hogehillweg #8 1101 CC Amsterdam Z-O
Phone : +31-20-6557460
Fax : +31-20-6557469
http://www.hirose.com/eu/

GERMANY:
HIROSE ELECTRIC EUROPE B.V. GERMAN BRANCH
Schoenbergstr. 20, 73760 ostfildern
Phone : +49-711-456002-1
Fax : +49-711-456002-299
http://www.hirose.com/eu/

GERMANY:
HIROSE ELECTRIC EUROPE B.V. NUREMBERG OFFICE
Neumeyerstrasse 22-26, 90411 Nurnberg
Phone : +49-911 32 68 89 63
Fax : +49-911 32 68 89 69
http://www.hirose.com/eu/

GERMANY:
HIROSE ELECTRIC EUROPE B.V. HANOVER OFFICE
Bayernstr. 3, Haus C 30855 Langenhagen, Germany
Phone : +49-511 97 82 61 30
Fax : +49-511 97 82 61 35
http://www.hirose.com/eu/

FRANCE:
HIROSE ELECTRIC EUROPE B.V. PARIS OFFICE
Regus La Garenne Colombes,Place de La Belgique,
71 Boulevard National La Garenne Colombes, 92250, France
Phone : +33 (0) 1 7082 3170
Fax : +33 (1) 7082 3101
http://www.hirose.com/eu/

UNITED KINGDOM:
HIROSE ELECTRIC EUROPE BV (UK BRANCH)
4 Newton Court, Kelvin Drive, Knowlhill,
Milton Keynes, MK5 8NH
Phone : +44-1908 202050
Fax : +44-1908 202058
http://www.hirose.com/eu/

CHINA:
HIROSE ELECTRIC (SHANGHAI) CO., LTD.
1601, Henderson Metropolitan, NO.300, East Nanjing Road, Huangpu District, Shanghai, China 200001
Phone : +86-21-6391-3355
Fax : +86-21-6391-3335
http://www.hirose.com/cn/

CHINA:
HIROSE ELECTRIC (SHANGHAI) CO.,LTD. BEIJING BRANCH
A1001, Ocean International Center, Building 56# East 4th Ring Middle Road, ChaoYang District, Beijing, 100025
Phone : +86-10-5165-9332
Fax : +86-10-5908-1381
http://www.hirose.com/cn/

CHINA:
HIROSE ELECTRIC TECHNOLOGIES (SHENZHEN) CO., LTD.
Room 09-13, 19/F, Office Tower Shun Hing Square, Di Wang Commercial Centre, 5002 Shen Nan Dong Road, Shenzhen City, Guangdong Province, 518008
Phone : +86-755-8207-0851
Fax : +86-755-8207-0873
http://www.hirose.com/cn/

HONG KONG:
HIROSE ELECTRIC HONGKONG TRADING CO., LTD.
Room 1001, West Wing, Tsim Sha Tsui Centre, 66 Mody Road, Tsim Sha Tsui East, Kowloon, Hong Kong
Phone : +852-2803-5338
Fax : +852-2591-6560
http://www.hirose.com/hk/

TAIWAN:
HIROSE ELECTRIC TAIWAN CO., LTD.
103 8F, No.87, Zhengzhou Rd., Taipei
Phone : +886-2-2555-7377
Fax : +886-2-2555-7350
http://www.hirose.com/tw/

KOREA:
HIROSE KOREA CO.,LTD.
250, Huimanggongwon-ro, Siheung-si,
Gyeonggi-do, Korea, 15083
Phone : +82-31-496-7000 or 7124
Fax : +82-31-496-7100
http://www.hirose.co.kr/

SINGAPORE:
HIROSE ELECTRIC SINGAPORE PTE. LTD.
10 Anson Road #26-16, International Plaza
079903, Singapore
Phone : +65-6324-6113
Fax : +65-6324-6123
http://www.hirose.com/sg/

INDIA:
HIROSE ELECTRIC SINGAPORE PTE. LTD. DELHI LIAISON OFFICE
Office NO.552, Regus-Green Boulevard, Level5, Tower C, Sec62, Plot B-9A, Block B, Noida, 201301, Uttar Pradesh, India
Phone : +91-12-660-8018
Fax : +91-120-4804949
http://www.hirose.com/sg/

INDIA:
HIROSE ELECTRIC SINGAPORE PTE. LTD. BANGALORE LIAISON OFFICE
Unit No-403, 4th Floor, No-84, Barton Centre, Mahatma Gandhi (MG) Road, Bangalore 560 001, Karnataka, India
Phone : +91-80-4120 1907
Fax : +91-80-4120 9908
http://www.hirose.com/sg/

MALAYSIA:
PENANG REPRESENTATIVE OFFICE
1-21-01, Suntech @ Penang Cybercity (1164), Lintang Mayang Pasir 3,11950, Bayan Baru, Penang, Malaysia.
Phone : +604-619-2564
Fax : +604-619-2574
http://www.hirose.com/sg/

THAILAND:
BANGKOK OFFICE (REPRESENTATIVE OFFICE)
Unit 4703, 47th FL., 1 Empire Tower, South Sathorn Road, Yannawa, Sathorn, Bangkok 10120 Thailand
Phone : +66-2-686-1255
Fax : +66-2-686-3433
http://www.hirose.com/sg/

Creative Links to World Electronics ®

HRS

HIROSE ELECTRIC CO.,LTD.
2-6-3,Nakagawa Chuoh,Tsuzuki-Ku,Yokohama-Shi 224-8540,JAPAN
TEL: +81-45-620-3526 Fax: +81-45-591-3726
http://www.hirose.com
http://www.hirose-connectors.com

Jan.1.2026 Copyright 2026 HIROSE ELECTRIC CO., LTD. All Rights Reserved.

The characteristics and the specifications contained herein are for reference purpose. Please refer to the latest customer drawings prior to use.
The contents of this catalog are current as of date of 01/2017. Contents are subject to change without notice for the purpose of improvements.